MEDIUM VOLTAGE
OIL AND CAST RESIN
DISTRIBUTION TRANSFORMERS

A product guaranteed by

Product range

Oil filled distribution transformers

Nominal ratings	from 25 to 2000 kVA
H.V. reference	7,2 - 12 - 17.5 - 24 kV
H.V. tappings off load	± 2.5% / ± 5%
Connections	Dyn11 - Yyn0
Cycles	50-50 / 60-60
Guarantee	24 months

Cast resin distribution transformers

Nominal ratings	from 100 to 2500 kVA
H.V. reference	7,2 - 12 - 17.5 – 24 kV
H.V. tappings off load	± 2.5% / ± 5%
Connections	Dyn11 - Yyn0
Cycles	50-50 / 60-60
Guarantee	24 months

Three phases oil and cast resin transformers, are manufactured and tested according to the IEC 60076-1 specifications.
Three phases oil transformers until 24 kV are in accordance with the EN 50588-1 and IEC Standards standards.
Cast resin transformers until 24 kV are in accordance with the EN 50588-1 and IEC 60076-1 standards.
Transformers can be manufactured in accordance with the VDE/DIN 0532, GOST, BS, NF, NEN particular specifications.

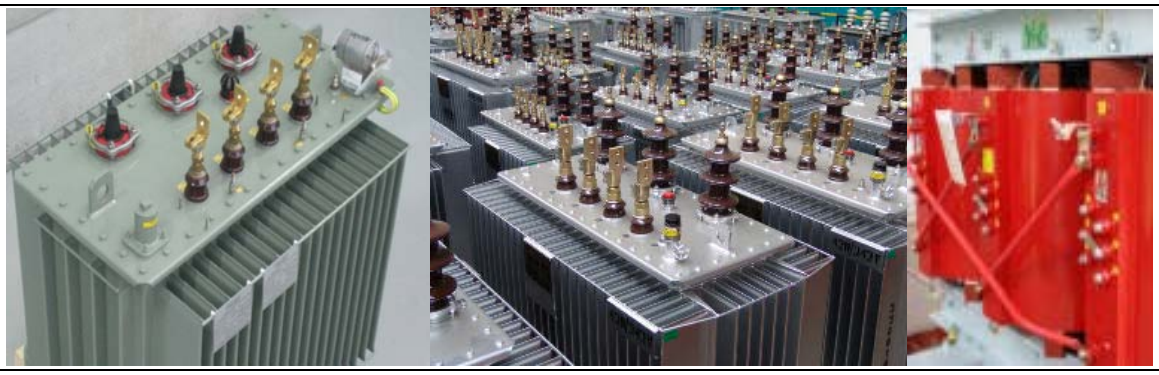

A product guaranteed by

Manufacturing process of the oil distribution transformers

The cores (for oil and cast resin transformers)

The cores are constructed using thin sheets of cold rolled grain-oriented magnetic steel silicon insulated on both sides.
Conventional grain oriented steel (CGO steel) is used for transformers with normal no-load losses, while transformers with reduced no-load losses are built using higher quality HiB steel.
The core sheets are cut at an angle of 45°, thus allowing maximum magnetic flux in the rolling direction.
Then the sheets are stacked in layers of either single or multiple overlaps. The multiple overlap or “step-lap” method offers additional benefits in terms of lowering no-load losses and noise levels.
Once the sheets are stacked, the core is compressed and glued to form a firmly bonded whole.

The majority of oil filled transformers have an oval-shaped core section having traditional stepped and fully filled round shape with a square mid section combined.
This method combines the benefits of a rectangular core section (simplicity of production) with those of a round core section (excellent short circuit withstand capability of the windings).

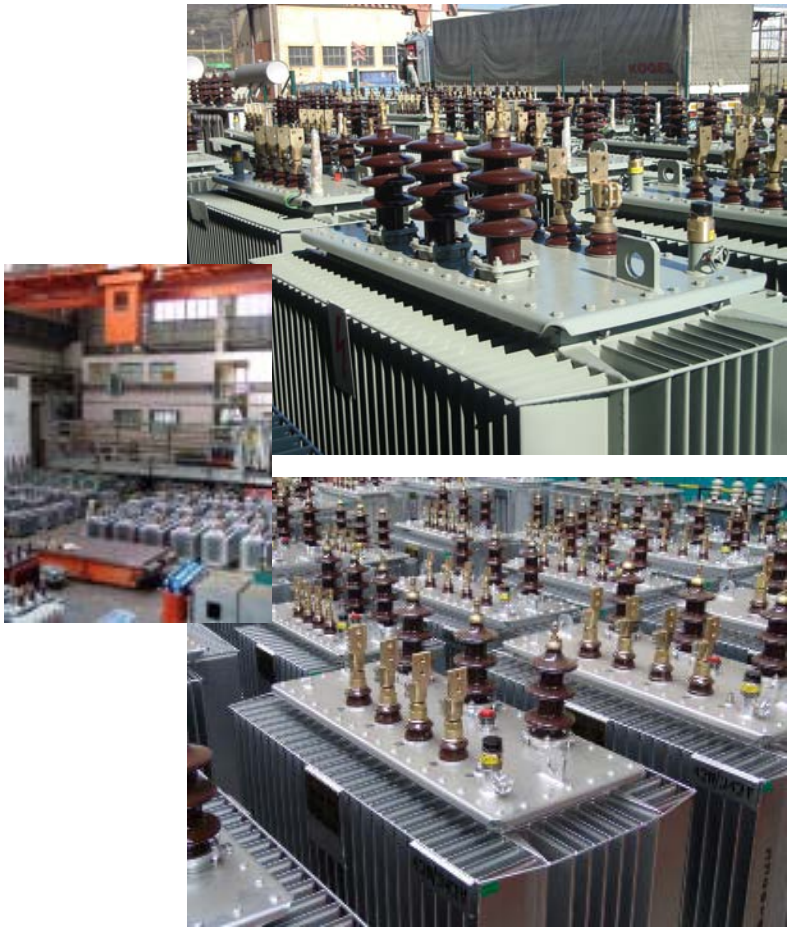

The windings

High voltage windings

The high voltage windings are almost exclusively of layered construction.
The copper conductors are made of one or more round or square wires, completely insulated by pure cellulose paper or by double enamel.
The insulation between the layers consists of pre-coated kraft paper, applied in sheet form.

Low voltage windings

The low voltage windings are usually made of copper or aluminium (from 400 kVA) sheet conductor (foil); this reduces the axial stresses produced by short circuit to a minimum.
The maximum voltage between each turn is only a few volts. This allows the insulation needed between the turns (foils) to be limited to one thermo-hardening epoxy adhesive which cures and bonds during the drying process.

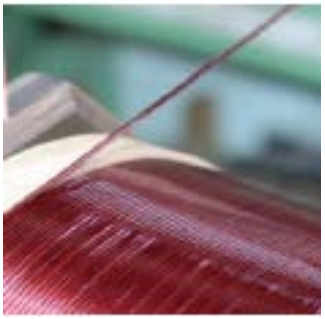

The tank

The vast majority of distribution transformer tanks are constructed with cooling fins
In hermetically sealed transformers, the cooling fin design also can withstand the working pressure or the pressures required during the treatment and filling of the transformers.
This allows the tank to be totally filled (and hermetically sealed), thus guaranteeing a long life of the transformer and reducing maintenance.
For the oil type power transformers from 4 MVA, the tanks are normally fitted with corrugated panels and equipped with a conservator.
This cylindrical conservator acts as an expansion tank for the oil when it expands as the windings heat up. The oil conservator is often fitted with a gauge glass, an air vent, an air dryer and a protection relay.

After welding, the tank is shot-blasted to remove any scale, oil or other surface impurities, leaving a clean prepared surface for maximum adhesion of the paint coating. Air-drying paint is then applied by spraying or flooding.
Several coats of paint are applied, to a total thickness of at least 100 microns, thus guaranteeing adequate protection against corrosion for indoor or outdoor transformers.
The tanks may be galvanised upon request.

The active parts

The windings are pushed over the core legs and wedged up to fill the spaces between the core and winding as much as possible.
Interleaving the laminations of the upper yoke with the laminations of the core legs completes the magnetic circuit.
The porcelain or the plug-in bushings are mounted on the cover, which are then fixed onto the assembled active part.
The next step consists of connecting the windings to the bushings.
The transformers are fitted with an off load tap changer. This switch allows the increase or decrease of a certain number of turns while the transformer is disconnected from the electric system.

The voltage ratio of the active part is then tested, and the assembly is dried in a forced air oven to remove the moisture from the insulating materials. Once the active part has been dried in the forced-air oven, it is given a final comprehensive quality inspection and placed into the tank.
The top cover is then bolted onto the tank. The transformers are placed in a vacuum chamber and filled with pre-treated oil (filtered, dried and degassed) under deep vacuum. This ensures optimum impregnation of the insulation materials by the oil, giving the insulation structure maximum dielectrical strength.
The transformers are filled with a high quality mineral oil, which fully complies with the requirements of IEC standard 296

Fittings and accessories

- Over-pressure valve applied above the cover of the tank
- Lifting hooks to draw out the inside part and the tank
- Base support with translation wheels and hooks to drag the transformer
- Rating plate
- Drain oil valve
- Thermometer pocket

Options

- Dial thermometer with two electrical contacts
- Protective block for hermetic transformers (DMCR or pressostat)
- MV voltage resin terminals to connect plug-in terminals
- Low voltage protecting terminals with protecting hoods
- And other on request

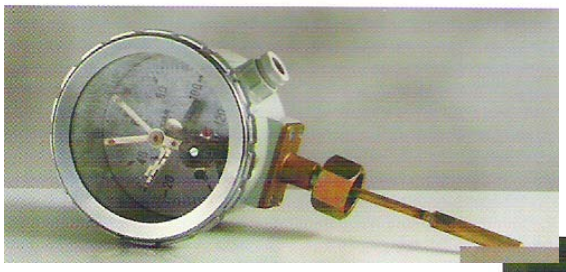

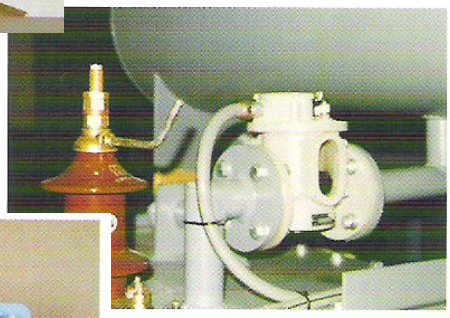

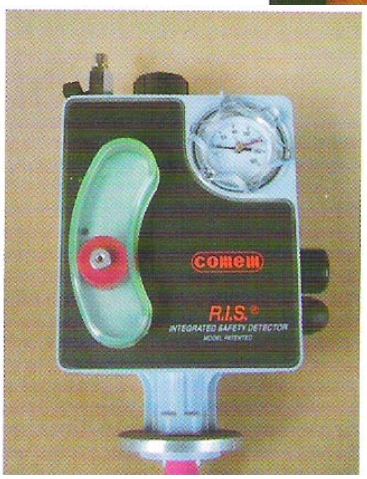

Three phase oil - immersed and hermeticaly sealed transformers
160 - 1000 kVA, 17,5 kV, Ecodesign 2 (2021), AA_0A_k max., AL winding

Technical data

Standard	EN 60076, EN 50588 - 1
EU Ecodesign Regulation	019/1783 (n° 548/2014)
Transformer design	Completely oil - filled, hermetically sealed
	Corrugated tank, cover bolted
Indoor and outdoor use	
Continous loading	Overload capacity - IEC 60076 - 7
Cooling system	ONAN, mineral oil - EN 60296
Ambient temperature	≤ 40°C , altitude ≤ 1000 m
Thermal class	105 (A) - temperature rise winding/oil 65/60 K
Corrosion protection	Coating system - class C3 - EN ISO 12944-5
	Standard RAL 7033

Eletrical characteristics

Rated power	160 - 1000 kVA
High voltage (HV)	10,6 - 11,4 - 12,3 - 15,375 kV
Tapping range HV off circiut	± 2 x 2,5 %
Low voltage (LV)	420/242 V
Frequency	50 Hz
Insulation level	Um 17,5 kV LI/AC 95/38
	Um 1,1 kV LI/AC - /3
Vector group	Dyn11

Rated power	**kVA**	**160**	**250**	**315**	**400**	**500**	**630**	**800**	**1000**
Type	aTOHn	3110/22	3310/22	3410/22	3510/22	3610/22	3710/22	3810/22	3910/22
No- load losses AA_0 max.	P_o (W)	189	270	324	387	459	540	585	693
No- load curent	I_0 (%)	0,5	0,4	0,35	0,3	0,25	0,2	0,15	0,1
Load losses A_k max.	$P_{k75°C}$ (W)	1750	2350	2800	3250	3900	4600	6000	7600
Impedance voltage	$u_{k\,75°C}$ (%)	4	4	4	4	4	4	6	6
Sound level									
- pressure (0,3 m)	L_{pA} dB(A)	33	36	38	39	40	41	42	44
- power	L_{WA}dB(A)	43	46	48	49	50	51	52	54
Dimensions									
- lenght (mm)	A	1130	1180	1195	1250	1315	1360	1475	1470
- width (mm)	B	690	760	845	820	885	870	940	960
- height (mm)	C	1240	1380	1475	1525	1605	1655	1710	1915
Weight [kg]	Oil	195	245	305	320	380	380	495	560
	Total	1135	1480	1670	1940	2250	2520	3015	3330

Cotrabel bvba, Vlasmarkt 12, 9000 Gent, BE Belgium, tel. 00.32.473.83.90.20 Mail: sales@cotrabel.com

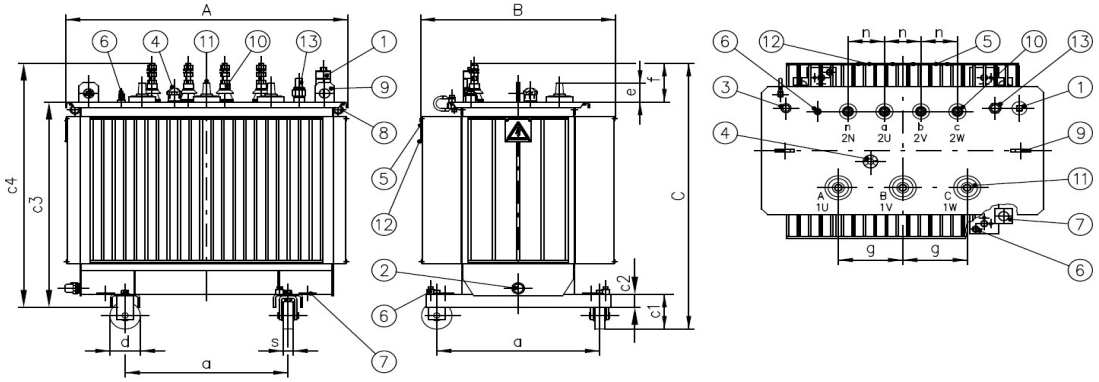

Legend

1. Oil filling plug
   - pressure switch
   - pressure relief valve
2. Oil drain valve DIN
3. Thermometer pocket
   - thermometer 2C
4. Tap changer handler
5. Rating plate
6. Earthing terminal
7. Pulling plug
8. Lushing eye
9. Lifting lug
10. LV Bushing EN 50386
    - connecting eye
11. HV plug - in terminal EN 50180
    Fixing parts EN 50180
12. Trade marke
13. Oil level gauge

LV Terminals

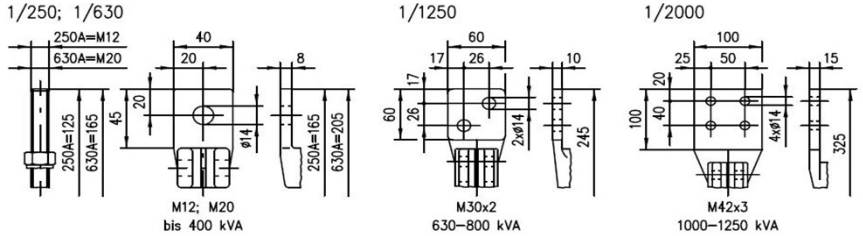

Dimensions

Rated power (kvA)	160	250	315	400	500	630	800	1000
Type - aTOHn	3110/22	3310/22	3410/22	3510/22	3610/22	3710/22	3810/22	3910/22
d (mm)	125	125	125	125	125	125	125	160
s (mm)	40	40	40	40	40	40	40	50
c1 (mm)	157,5	157,5	160,5	160,5	160,5	160,5	160,5	202,5
c2 (mm)	60	60	60	60	60	60	60	60
c3 (mm)	978	1078	1170	1220	1260	1310	1365	1448
c4 (mm)	1143	1283	1375	1425	1505	1555	1610	1773
a (mm)	520	520	670	670	670	670	670	820
e (mm)	85	85	85	85	85	85	85	85
f (mm)	165	205	205	205	245	245	245	325
g (mm)	265	265	265	265	265	265	265	265
n (mm)	125	150	150	150	150	150	150	150

The manufacturer reserves the right to change the final dimensions and weights without prior notice.

Cotrabel bvba, Vlasmarkt 12, 9000 Gent, BE Belgium, tel. 00.32.473.83.90.20 Mail: sales@cotrabel.com

Manufacturing process of the cast resin transformers

The windings

High voltage windings

The high voltage windings are made out of aluminum or copper strips and are designed to avoid that thermal expansion causes slips between conductors and resin.
The method of manufacture guarantees a perfect distribution of the electrical field and the absence of partial discharges as well as an excellent resistance to impulse stress.
Guarantees have also been given that the windings resist the external dynamic effects of short-circuits.
The dielectric materials used (resin, conductors, and insulators) are of class F.
The transformer has a working temperature rise limit of 100°K (Class F).

Low voltage windings

The low voltage windings are obtained from aluminum or copper strips with the same height of the primary limb to reduce to a minimum the axial strain due to short circuit currents. A class F insulating block insulates the coils.
Before mounting, the LV windings are immersed in alkyd resin and then polymerized at 150°C. This process guarantees excellent resistance to external agents (humidity and pollution of the atmosphere).
The winding is designed and made out so that the maximum working temperature rise at full load is equal to class F (delta T=100°K).
The concentric shapes of the two windings (HV and LV) are maintaining by special spacers - a support which allows the supply of the flux to be uniformly distributed and avoids the onset of abnormal vibrations.
The resin used in the casting system is an epoxy resin charged with very fine quartz powder, given the transformer the necessary characteristics to pass every test successfully.
The computerized monitoring ensures the accurate control of all phases of the process, from the preparation of the resin to the temperature control in the polymerization.
The epoxy resin used is of the class F thermal stability and the product is manufactured in conformity with the temperature limits given by the IEC 60726 standards.

Fittings and accessories

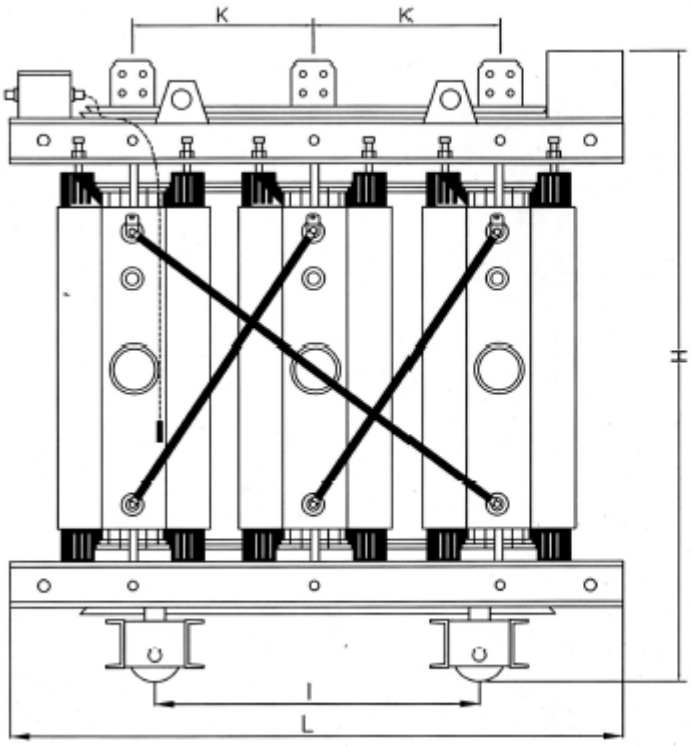

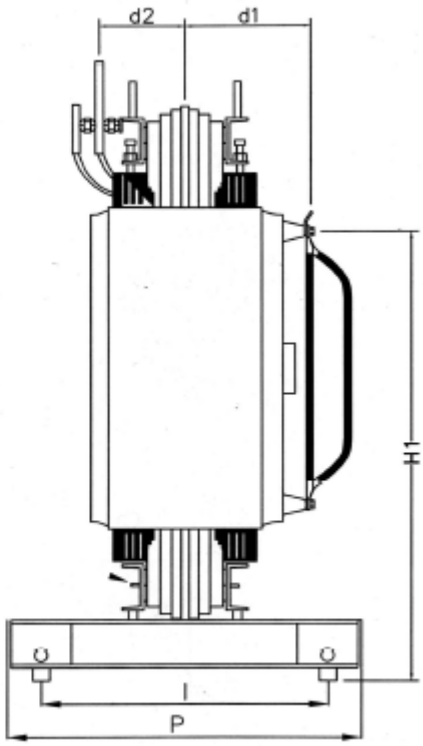

Standard Fittings

- Lifting hooks
- Base structure with translation Wheels.
- H.V. Terminals
- L.V. Terminals
- Rating plate
- Ground plate
- 6 PTC sensors with an electronic converter.

Optional fittings

- PT 100 thermal resistance
- Hermetic sealed box for electric connections
- Forced air cooling
- Digital temp. control with auxiliary contacts
- Protection box for indoor installations.

Cast resin dry type transformers - type aTSE
100 - 3150 kVA, 17,5, ECO design 2 (2021), AA_0A_k max.

Technical data

Standards	EN IEC 60076 - 11, EN 50588 - 1
Ecodesign regulation	EU 2019/1783, n° 548/2014
Indoor use	
Continuous loading	
Cooling system	AN, ANAF - rated power + 40 % with fans
Ambient temperature	≤ 40°C *, altitude ≤ 1000 m *
Thermal class	155 (F) - Temperature rise 100 K
Climatic class	C2 Thermal shock - 60°C
Environmental class	E2
Fire behaviour class	F1
Partial discharges	≤ 10 pC
Degree of protection	IP 00 - without housing
Corrosion protection	metal parts hot - dip galvanized

Electrical characteristics

Rated power	100 kVA - 3150 kVA*
High voltage (HV)	10,6-11,4-12,3-15,375 kV
Tapping range HV	± 2 x 2,5 % off- circuit
Low voltage (LV)	400/231 V, 420/242 V
Frequency	50 Hz*
Insulation level	Um 17,5 kV LI/AC95/38
	Um 1,1 kV LI/AC - /3
Impedance voltage	6% *
Vector group	Dyn1*

HV windings - Aluminium wire, strip, casted in resin

LV windings - Aluminium wire,tape, impregnated

Rated power	kVA	100	160	250	400	630	800	1000	1250	1600	2000	2500	3150
Type	aTSE	698/22	718/22	738/22	758/22	778/22	788/22	798/22	808/22	818/22	828/22	838/22	848/22
No-load losses AA_0 max.	P_0 (W)	252	360	468	675	990	1170	1395	1620	1980	2340	2790	3420
No-load current	I_0 (%)	0,6	0,5	0,4	0,3	0,25	0,23	0,2	0,19	0,18	0,15	0,1	0,1
Load losses A_k max.	$P_{k75°C}$ (W)	1565	2260	2955	3915	6175	6955	7825	9565	11305	13915	16520	19130
	$P_{k120°C}$ (W)	1800	2600	3400	4500	7100	8000	9000	11000	13000	16000	19000	22000
Sound level													
Presure (1 m)	L_{pA} dB(A)	35	38	41	44	45	46	49	51	52	54	55	58
Power	L_{WA} dB(A)	50	53	56	59	61	63	64	66	67	69	70	73
Total weight	[kg]	785	965	1280	1765	2125	2560	2875	3410	4250	4620	5955	7485

Cotrabel bvba, Vlasmarkt 12, 9000 Gent, BE Belgium, tel. 00.32.473.83.90.20 Mail: sales@cotrabel.com

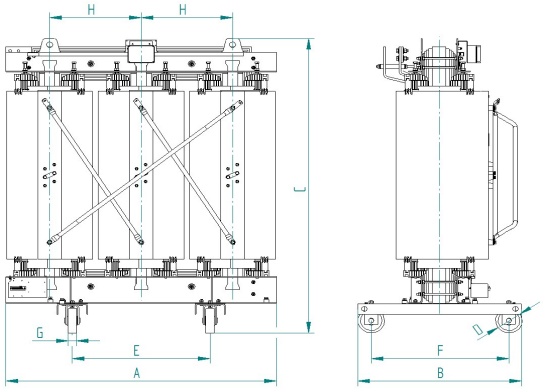

Dimensions [mm]

[kVA]	100	160	250	400	630	800	1000	1250	1600	2000	2500	3150
aTSE	698/22	718/22	738/22	758/22	778/22	788/22	798/22	808/22	818/22	828/22	838/22	848/22
A	1150	1200	1300	1450	1480	1550	1610	1720	1780	1940	2030	2180
B	690	690	715	830	835	980	970	970	980	1270	1270	1270
C	1190	1290	1430	1660	1775	1890	1930	2035	2205	2355	2555	2615
D	125	125	125	125	125	1605	160	160	160	200	200	200
E	520	520	520	670	670	820	820	820	820	1070	1070	1070
F	520	520	520	670	670	820	820	820	820	1070	1070	1070
G	40	40	40	40	40	50	50	50	50	70	70	70
H	390	405	440	490	500	525	545	580	605	620	680	730

Standard fittings

- 4 bi - directional flat rollers
- 4 lifting holes
- 4 haulage holes on the underbase
- 2 earthing points
- 1 rating plate (on HV site)

Optional fittings

- Temperature senzors in the LV windings - 2 PTC thermistors or PT 100/phase and tripping contacts and cooling fans control
- Temperature monitoring device with alarm
- Dial thermometer
- AF cooling system (+ 40 %) with the fans
- Antivibrations pads
- Placement of the LV/HV terminals

HV Terminal

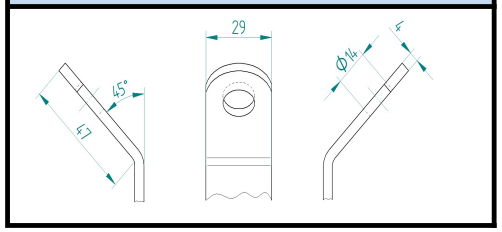

LV Terminal

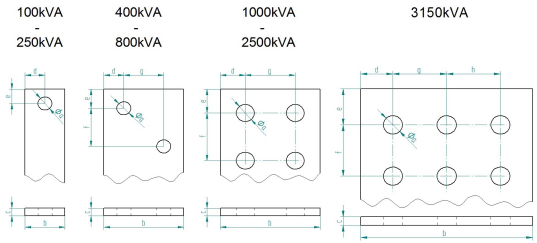

Dimensions [mm]

[kVA]	100	160	250	400	630	800	1000	1250	1600	2000	2500	3150
aTSE	698/22	718/22	738/22	758/22	778/22	788/22	798/22	808/22	818/22	828/22	838/22	848/22
a	14	14	14	14	18	18	18	18	18	18	18	18
b	40	40	60	80	100	100	100	120	120	120	125	160
c	5	5	5	8	10	10	12	12	15	16	20	20
d	20	20	30	20	30	30	25	30	30	30	32,5	30
e	15	15	20	20	30	30	25	30	30	30	32,5	35
f	-	-	-	40	40	40	50	60	60	60	60	50
g	-	-	-	40	40	40	50	60	60	60	60	50
h	-	-	-	-	-	-	-	-	-	-	-	50

Manufacturer reserves the right to modify data without notice.

Cotrabel bvba, Vlasmarkt 12, 9000 Gent, BE Belgium, tel. 00.32.473.83.90.20 Mail: sales@cotrabel.com

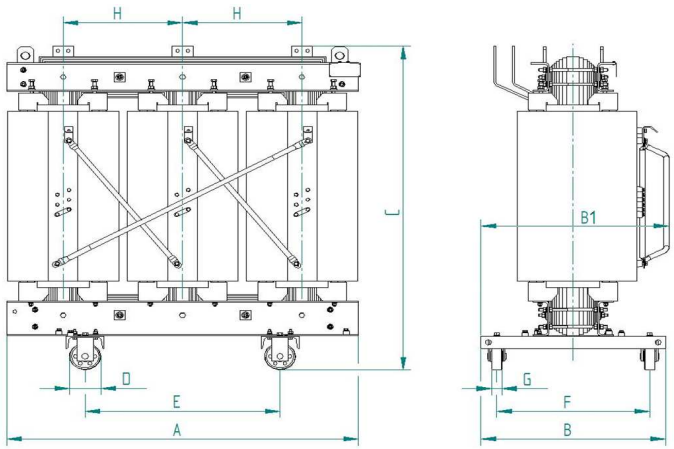

Standard fittings

- 4 bi - directional flat rollers
- 4 lifting holes
- 4 haulage holes on the underbase
- 2 earthing points
- 1 rating plate (on HV site)

Optional fittings

- Temperature senzors in the LV windings - 2 PTC thermistors or PT 100/phase
- Temperature monitoring device with alarm and tripping contacts and cooling fans control
- Dial thermometer
- AF cooling system (+ 40 %) with the fans
- Antivibrations pads
- Placement of the LV/HV terminals

HV Terminal

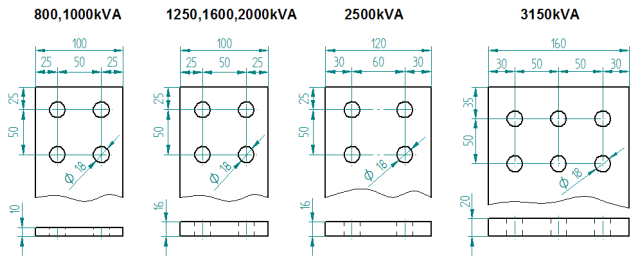

LV Terminal

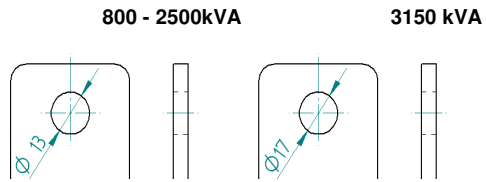

Dimensions

[kVA]	800	1000	1250	1600	2000	2500	3150
aTSE	787/22	797/22	807/22	817/22	827/22	837/22	847/22
A	1590	1660	1830	1830	1890	1980	2150
B	830	970	970	970	1270	1270	1270
C	1890	1920	2070	2215	2380	2540	2640
D	150	150	150	150	200	200	200
E	670	820	820	820	1070	1070	1070
F	670	820	820	820	1070	1070	1070
G	50	50	50	50	70	70	70
H	540	560	575	610	640	670	725

Manufacturer reserves the right to modify data without notice.

Transformer testing

All routine tests are performed and special tests required by IEC 60076 can be performed in a modern and efficient test room.

Approval tests

Approval tests are automatically carried out on each transformer in order to check the compliance with the guaranteed data. These tests can be realised in front of the customer at extra-charges. A test report is delivered for each transformer.
The tests consist in particular:

- Measurement of the winding resistance.
- Measurement of the transformation ratio, the connections and polarity check.
- Measurement of the short circuit voltage (main taps) and of the load losses when returning to the reference temperature.
- Measurement of the losses and no load current.
- Industrial frequency test.
- Insulation test with induced voltage.
- Insulation test on off load commutators and auxiliary circuits, according to IEC 14-4 § 8.8

Type tests and special tests

Type and special tests may be carried out on request and in accordance with the agreement taken between the company and the customer. These tests will be carried out on one sample and charged in line with the agreed conditions during the order negotiation.
Type tests:

- Heating test
- BIL test 1,2/50 µ sec test

Special tests

- Insulation tests (IEC 14-4 part III)
- Measurement of the homopolaire impedance on three-phase transformers
- Dynamic resistance test during a short circuit
- Measurement of the noise level
- Measurement of the loadless current harmonics
- Measurement of absorbed power by the fan motors

All these tests, with the exception of the short circuit test, can be performed in house. Short circuit test shall be performed upon request in official and accredited laboratories.

QUALITY MANAGEMENT

Manufacturing and Quality Assurance rules

The transformers are manufactured in accordance with the national and international standards and laws in force.
Transformers are complying with the IEC standards
We are specialized in adapting the product to the European standards.
The Quality Assurance of our product maintenance, installation and manufacturing is ensured and certified in line with the ISO 9001 standards.

VLASMARKT, 12
B – 9000 GENT
sales@cotrabel.com

A product guaranteed by